CHARON FINIAL

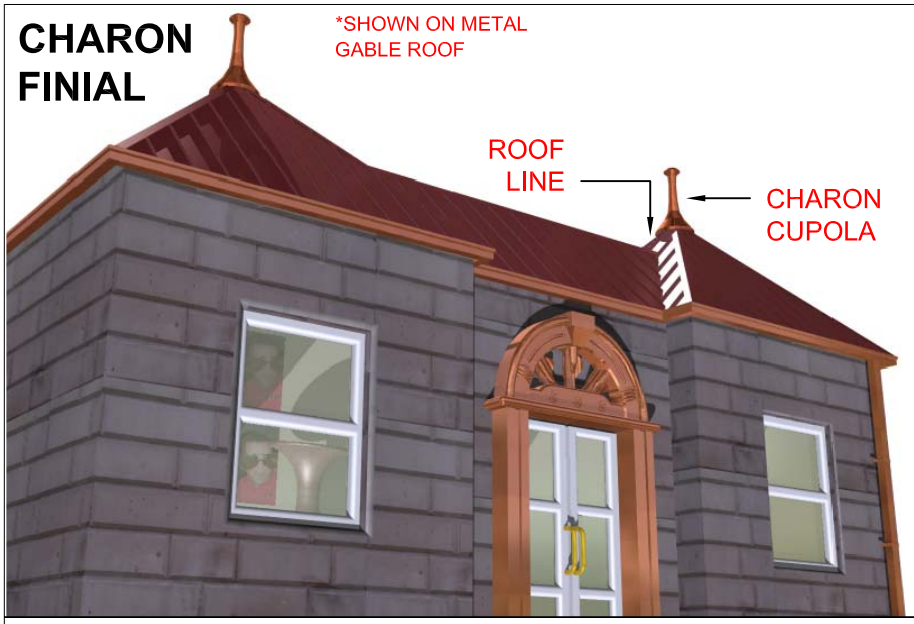

MATERIAL:

16 OZ COPPER

DIMENSION:

[ ]DIAMETER
[ ]HEIGHT

QUANTITY[ ]

*NOTE:

THIS TYPE OF FINIAL IS DESIGNED FOR THE MOST COMMON ROOFS.

THE STANDARD HIEGHT OF THIS FINIAL IS 24". IT ALSO CAN BE CUSTOMEZED.

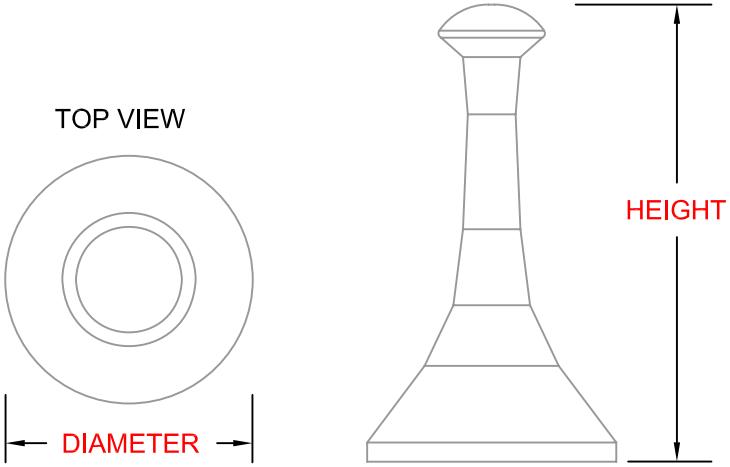

ONCE THE FABRICATION BEGINS, ITEMS CAN NOT BE RETURNED. THE DETAILS FOR THIS JOB WERE CHECKED AND APPROVED BY:_____

B & B SALES REP

NAME: _____ SIGN: X_____

DATE: __ / __ / ____

B&B SHEET METAL
4 Generations of Experience & 100 Years of Excellence

25-40 50 TH AVE.
LIC, NY 11101
P 718 433 2501
F 718 433 2709
info@bbsheetmetal.com
www.bbsheetmetal.com

COMPANY:	DATE:
INVOICE: PO#:	DRAWING #: FINIAL-02
PROJECT:	PAGE(S): 1 OF 1
INSTALLATION INSTRUCTION:	DRAWING BY: NELSON SUT HO
OTHER:	APPROVED BY: CHRIS PERO